EMS Brno

Data Acquisition Environment

Hardware – Software – Cloud application

www.emsbrno.cz

Stem diameter sensor PDS40P

Main features:
- Pivot design
- Step-less reading
- Easy and fast non-invasive fixing
- Voltage output
- Manufactured by EMS

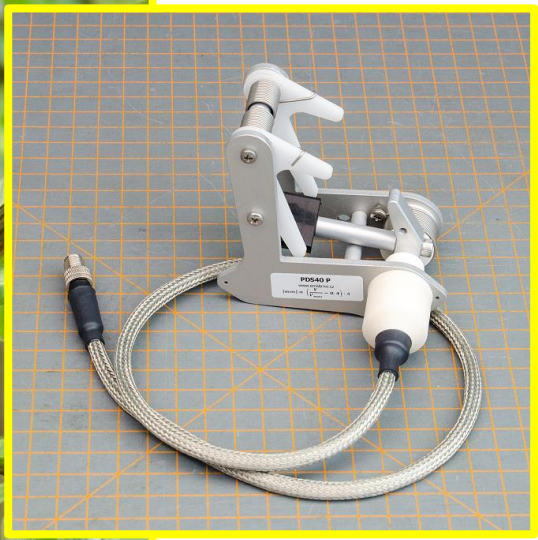

Specifications:
- Working range 5 to 40 mm
- One micrometer resolution
- Accuracy 0.5% of full scale
- Tightening strength up to 3 N
- Temperature dependence better than ± 3 µm/K

General description:

PDS40P is designed for the measurement of diameters of small stems or branches in the range between 5 and 40 mm. Sensor output voltage is directly proportional to stem diameter.

The sensor is designed with respect to easy and fast installation. It is fastened on the measured object by means of three pressure levers; the central jib turns the rotary position sensor proportionally to the object diameter.

Adherence pressure is set as a compromise between the influence on plant tissues and stability of position. The bearing of position sensor is carefully shaped for minimal effect of temperature and axial forces.

Each sensor is individually calibrated in 3 points over the whole range for desirable sensors linearity.

Installation notes:

Sensor should be placed on a relatively straight and regularly shaped stem or branch. The cable must be fastened to the stem in order to avoid influence of datalogger weight on the sensor position. The label on the black plate on the jib must be visible - it must point outwards of the stem.

Specification

Measuring range	5 to 40 mm
Accuracy	> 0.5 mm
Linearity	± 0.5 % of full scale
Resolution	1.24 µm
Rotary position sensor	4.7 kOhm ±20 %
Power voltage	5 to 12 V
Current consumption	0.75 mA
Output voltage range	1000 to 1700 mV
Tightening strength	1.5 to 2 N lateral levers, 2 to 3 N central sensing jib
Weight of sensor	160 g
Connection	3-pin M8 connector male
Protection	IP 67
Temperature working range	-40 to 60 °C

Calibration equation

Sensor uses the most linear part of sensing potentiometer close to the middle of its range.

The conversion formula for sensors is

$$Diameter\ [mm] = \left(\frac{V}{Vmax} - 0.4\right) * A$$

where A = parameter written on the jib of the sensor.

Stem diameter sensor PDS40P - male connector wiring

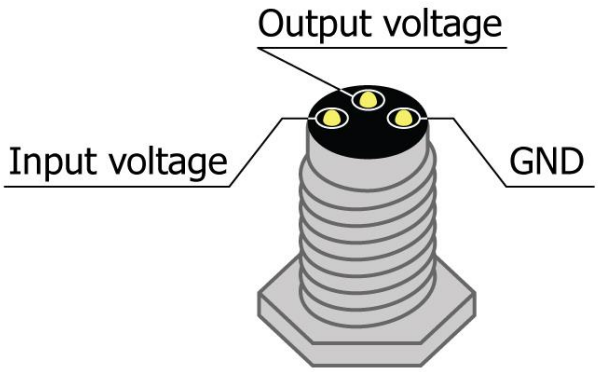

Standard M8 female connector cable wiring

Brown - Input voltage
Black - Output voltage
Blue - GND

Two-year full warranty.